Cable preparation toolset for MV cables
TNB composition for 33 kV cables

Use:

- Complete toolset for preparing MV cables.

POLY



Removing mechanical protection



Stripping external sheath



Stripping insulation

OUT SCP/NP



Removing peelable semiconductor



Removing non-peelable semiconductor

ODL5



External sheath longitudinal cut



External sheath circular cut

CONE



Making a cone at the end of the insulation

Characteristics:

- **POLY** (see FTC 160 031)
- **OUT SCP/NP** (see FTC 160 034)
- **CONE** (see FTC 160 003)
- **ODL5** (see FTC 130 267)
- **OD PE PVC PB** (see FTC 160 051)
- **ECARTE DT** (see FTC 160 005)
- Black plastic carrying case including:
  - Metal hinges
  - Interchangeable closure clips
  - Protective foam
- Total mass of the toolset: 7250 g



OD PE PVC PB



Circular cut



Longitunidal cut

Composition:

Reference	Qty	Description / Function	Weight (g)
POLY	1	Tool for stripping external sheath and primary insulation	1130
OUT SCP/NP	1	Tool for removing peelable + non peelable semiconductors	1300
CONE150 TB 11 SP	1	Pencilling tool for primary insulation (11kV - 150 mm²)	335
CONE240 TB 11 SP	1	Pencilling tool for primary insulation (11kV - 240 mm²)	345
CONE 630DTB SP	1	Pencilling tool for primary insulation (33kV - 630 mm²)	285
HTA1254	6	Handle for pencilling tools CONE	390
OD PE PVC PB	1	Stripper for PE / PVC / lead sheaths Ø25 - 85 mm	1500
ECARTE DT	2	Hook for extracting the external sheath (after cutting)	360
ODL5	1	Universal cable sheath stripper	200
MA60-AL	1	Replacement blade for OD PE PVC PB (6.0 mm)	35
LAME POLY L	1	Replacement blade for POLY	20
LAME OUT SCNP	1	Replacement blade for SCNP	20
LAME OUT SCP CH	1	Replacement blade for SCP	20
LAME CONE TB11	1	Replacement blade for CONE	20
-	-	Allen keys for changing blades + cleaning brush	30
COFFRETP4 6	1	Plastic carrying case with protective foam (450 x 330 x 110 mm)	1260

DERANCOURT®
1 rue de Barcelone - Sainte-Eugénie - 66270 LE SOLER - France
Tel: +33 (0)4 68 92 11 55 - Fax: +33 (0)4 68 92 71 78
Email: contact@derancourt.com
www.derancourt.com

Non contractual document subject to change without notice

Ref : ODL5

Universal cable sheath stripper



Use:

- For stripping cable external sheath (any type of insulating material).
- Longitudinal and circular cutting
- For cables with diameter greater than 25 mm
- Cutting depth 5 mm max

Characteristics:

- Body and lever made of insulating material
- Treated steel blade (adjustable depth from 0 mm up to 5 mm
- Interchangeable blade with two cutting edges
  (2-sided blade: turn the blade for a second use)
- Dimensions: extended: 210 mm / folded: 155 mm
- Weight: 200 g



Longitudinal cut



Circular cut

Accessory:

- Ref. **LAME ODL5** replacement blade

DERANCOURT®
1 rue de Barcelone - Sainte-Eugénie - 66270 LE SOLER - France
Tel: +33 (0)4 68 92 11 55 - Fax: +33 (0)4 68 92 71 78
Email: contact@derancourt.com
www.derancourt.com

Non contractual document subject to change without notice

Ref : OD PE PVC PB

Stripper for PE / PVC / lead sheaths Ø25 - 85 mm

Use:

- Stripping sheaths of the following types of cables:

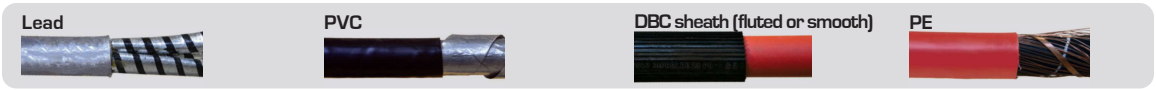

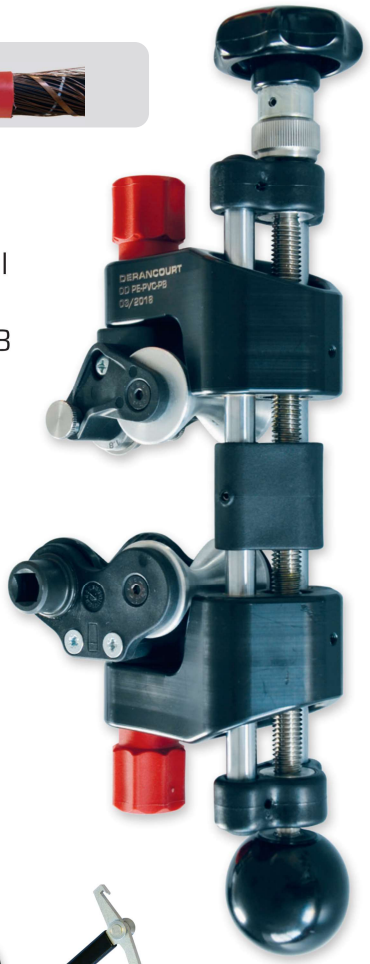

Characteristics:

- Tool made of composite material and stainless steel
- The tool is equipped with an interchangeable blade based on the material and thickness, quick removal of the blade (no tool required)
- Available from 0 mm to 6 mm : 0,2 | 0,4 | 0,6 | 0,8 | 1,0 | 1,2 | 1,4 | 1,6 |1,8 | 2,0 | 2,2 | 2,4 | 2,6 | 2,8 | 3,0 | 3,2 | 3,4 | 3,6 | 3,8 | 4,0 | 4,2 | 4,4 | 4,6 ...
- Adjustable blade and roller blocks for circular or longitudinal cutting
- Long-distance straight cut without effort
- Dimensions: 300 x 123 x 70 mm
- Weigth: 1,5 kg

Marking:

DERANCOURT OD PE PVC PB Serial number

Accessories (supplied):

- Ref. **T200-75 NI** : 3/8'' T-spanner
- Ref. **MB20-PB2** : 2.0 mm blade with double cutting (for lead)
- Ref. **MB20-AL :** 2.0 mm blade
  (Possibility to modify the blade upon request)



Accessories (optional):

- Ref. **SAC KT :** Storage fabric pouch 360 x 170 x 60 mm
- Ref. **ECARTE DT :** Hook for extracting the sheath



FUNCTIONS

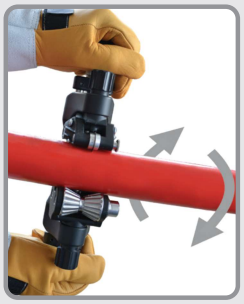

Circular cut



Blade and roller orientation

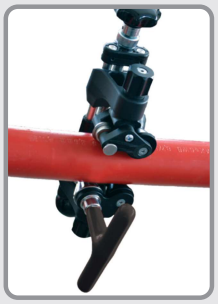

Use the spanner



Fast and effortless longitudinal cut



Sheath extraction

DERANCOURT®
1 rue de Barcelone - Sainte-Eugénie - 66270 LE SOLER - France
Tel: +33 (0)4 68 92 11 55 - Fax: +33 (0)4 68 92 71 78
Email: contact@derancourt.com
www.derancourt.com

Non contractual document subject to change without notice

Ref : OUT SCP/NP

Tool for removing easy-strip semiconductor and bonded semiconductor

Use:

- Preparation tool for medium voltage cables from 25 mm² to 630 mm².



Removing easy-strip semiconductor



Removing bonded semiconductor

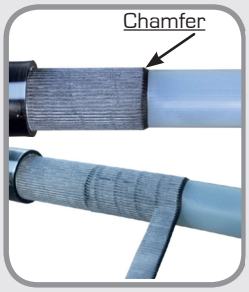



Characteristics:

- Treated aluminum body
- Blades made of rapid steel
- Adjustable stop from 25 to 55 mm (length of remaining semiconductor)
- Capacity: ø17 mm to ø60 mm (25 mm² to 630 mm²)
- Max cutting depth: 1.2 mm (peelable semiconductor)
- Max cutting depth: 2 mm (bonded semiconductor)
- Makes a chamfer at the end of semiconductor
- Precise adjustment to 1/10 mm
- For all types of semiconductors
- **N° ENEDIS**: 07.57.766
- Identification color: red
- Weight: 1,3 kg

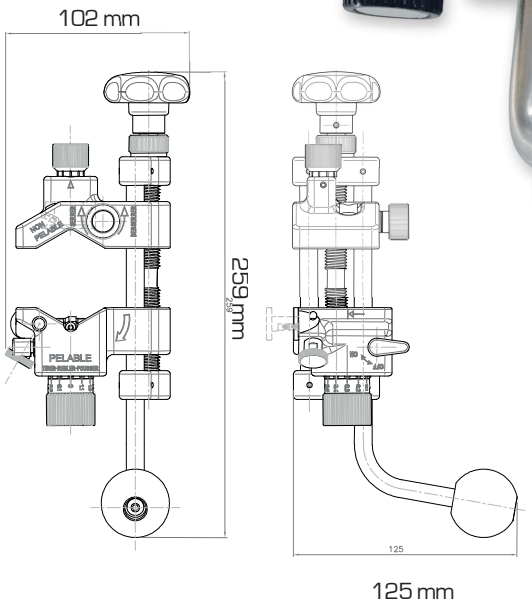

Marking:

DERANCOURT
OUT SCP/NP
Serial number

Accessories:

- Ref. **LAME OUT SCP CH:** Replacement blade for easy-strip semiconductor
- Ref. **LAME OUT SCNP:** Replacement blade for bonded semiconductor

DERANCOURT®
1 rue de Barcelone - Sainte-Eugénie - 66270 LE SOLER - France
Tel: +33 (0)4 68 92 11 55 - Fax: +33 (0)4 68 92 71 78
Email: contact@derancourt.com
www.derancourt.com

Non contractual document subject to change without notice

Ref : POLY

Tool for stripping external sheath and insulation

Use:

- Preparation tool for medium voltage cables from 25 mm² to 630 mm².
- Functions:



Removing mechanical protection



Stripping external sheath



Stripping insulation

Characteristics:

- Treated aluminum body
- Blade made of rapid steel
- Capacity: ø17 mm to ø60 mm (25 mm² to 630 mm²)
- Max cutting depth: 12 mm.
- For all materials (XLPE / EPR / PVC / PE...)
- Adjustable stop for stripping insulation (20 mm to 110 mm)
- Supplied with 3 sets of clamp protectors
- **ENEDIS N°** 07.57.764
- Identification color: Blue
- Delivered with instructions for use (video available on our website)
- Weight: 1,13 kg



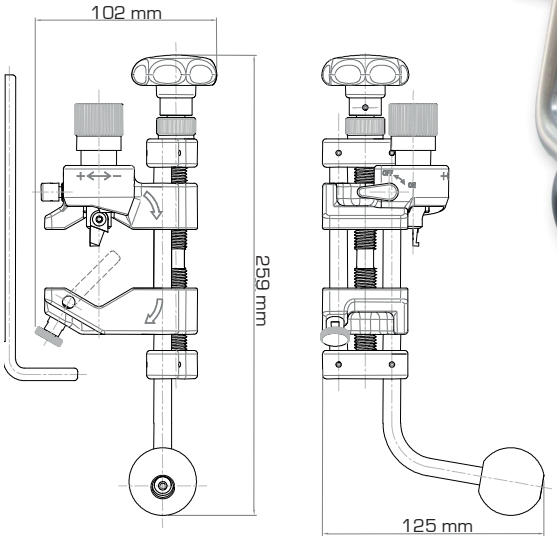

Marking:

DERANCOURT
POLY
Serial number

Accessories:

- Ref. **LAME POLY L**: Replacement blade
- Ref. **PLAQ POLY**: 3 sets of clamp protectors

DERANCOURT®
1 rue de Barcelone - Sainte-Eugénie - 66270 LE SOLER - France
Tel: +33 (0)4 68 92 11 55 - Fax: +33 (0)4 68 92 71 78
Email: contact@derancourt.com
www.derancourt.com

Non contractual document subject to change without notice

Ref : CONE DT

Tool for making a cone on the insulation end

Use:

- Pencilling tool for medium voltage cables from 50 mm² to 630 mm²
- Function:





Making a cone shape on the insulation end

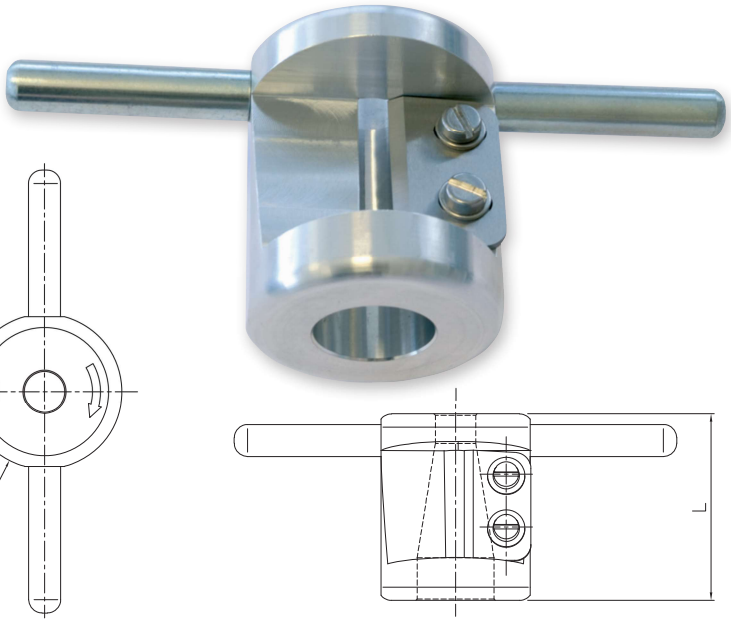

Characteristics:

- Zinc coated steel screw-on handles (55 mm long)
- Capacity: 50 mm² to 630 mm²
- Aluminum alloy body
- Cone length: 30 mm to 40 mm (For other lengths, please contact us)

Marking:

DERANCOURT REFERENCE Month/Year

Accessory:

- Replacement blade Ref. **LAME CONE DT** (Same blade whatever the cable section) ENEDIS N°07.57.829
- Handle Ref. **HTA1254**



Reference	Cross section	Thickness of insulation max	ENEDIS N°	D (mm)	L (mm)	Weight (g)
CONE 35DT	35 mm²	6 (mm)	–	58	62	360
CONE 50DT	50 mm²	6 (mm)	07.57.820	58	62	390
CONE 70DT	70 mm²	7 (mm)	–	58	62	320
CONE 95DT	95 mm²	6 (mm)	07.57.821	58	70	435
CONE 95DTB	95 mm²	9 (mm)	–	58	70	435
CONE 120DT	120 mm²	6 (mm)	–	58	70	365
CONE 150DT	150 mm²	6 (mm)	07.57.822	58	70	425
CONE 150DT2000	150 mm² Cable 2000	5 (mm)	07.57.824	58	70	430
CONE 150DTB	150 mm²	9 (mm)	–	58	70	425
CONE150 TB 11	150 mm²	3.4(mm)	–	58	70	425
CONE 185DT	185 mm²	6 (mm)	–	58	70	345
CONE 240DT	240 mm²	6 (mm)	07.57.823	58	70	410
CONE 240DT2000	240 mm² Cable 2000	5 (mm)	07.57.824	58	70	415
CONE 240DTB	240 mm²	9.5 (mm)	–	58	70	410
CONE240 TB 11	240 mm²	3.4(mm)	–	58	70	410
CONE 300DT	300 mm²	6 (mm)	–	58	70	330
CONE 400DT	400 mm²	6 (mm)	–	58	70	310
CONE 400 S1	400 mm²	5 (mm)	–	58	70	310
CONE 500DT	500 mm²	6 (mm)	–	64	70	380
CONE 500DTB	500 mm²	8 (mm)	–	64	70	380
CONE 630DT	630 mm²	6 (mm)	07.57.832	64	70	405
CONE 630DTB	630 mm²	9 (mm)	–	64	70	405

DERANCOURT®
1 rue de Barcelone - Sainte-Eugénie - 66270 LE SOLER - France
Tel: +33 (0)4 68 92 11 55 - Fax: +33 (0)4 68 92 71 78
Email: contact@derancourt.com
www.derancourt.com

Non contractual document subject to change without notice

Ref : ECARTE DT

Tool for spreading the external sheath

Use:

- Preparation tool for medium voltage cables from 25 mm² to 630 mm².
- Spreading the external sheath of cables to insert the earthing connector



Lifting the external sheath



Characteristics:

- Capacity: ø17mm to ø60 mm (25 mm² to 630 mm²)
- Treated zinc-coated steel.
- Guided by two conical support rollers.
- The shape fo the heel provides the right opening angle.
- PVC coated handle.
- ENEDIS N° 07.57.729
- Dimensions: 145 x 90 x 20 mm
- Weight: 180 g.

Marking:

DERANCOURT REFERENCE Month/Year

DERANCOURT®
1 rue de Barcelone - Sainte-Eugénie - 66270 LE SOLER - France
Tel: +33 (0)4 68 92 11 55 - Fax: +33 (0)4 68 92 71 78
Email: contact@derancourt.com
www.derancourt.com

Non contractual document subject to change without notice